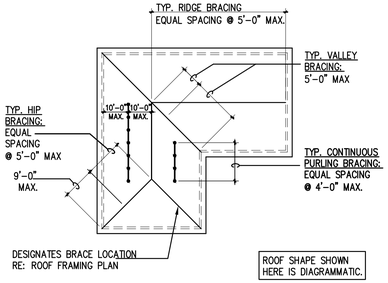

DIAGRAM: TYPICAL BRACE LOCATIONS

(NOT TO SCALE)

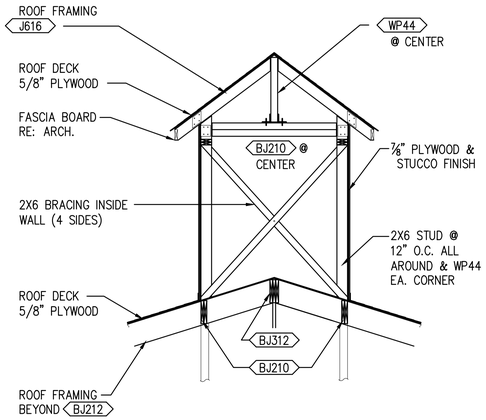

1 **DETAIL:** AT TOWER

PLAN NOTES

1. ROOF FRAMING IS DESIGNED FOR COMPOSITION SHINGLE ROOF @ 6.5 PSF.
2. DESIGNATES BRACE (APPROXIMATELY IN THE INDICATED DIRECTION)
3. INDICATES A VERTICAL (OR NEARLY VERTICAL) BRACE TO SUPPORTING MEMBER BELOW.
4. BRACE SUPPORT DESIGNATION:
   (ALL BRACING TO WALLS UNLESS OTHERWISE NOTED)
   (BM) BRACE TO BEAM
   (BS) BRACE TO STRONGBACK
   (BW) BRACE TO WALL
5. ALL RAFTERS ARE 2x6 #3 S.Y.P. AT 16" O.C. U.O.N.
6. PURLINS SHALL BE 2x6 CONTINOUS MEMBER.
7. DEPTH OF RIDGE BEAM, HIP OR VALLEY RAFTER:
   A. SHALL BE ONE SIZE WIDER THAN THE LARGEST RAFTER FRAMING INTO IT (EXAMPLE: 2x8 BEAM FOR 2x6 RAFTER);U.O.N.
   B. SHALL MATCH OR EXCEED THE CUT END OF THE RAFTER.
8. PROVIDE DOUBLE FRAMING @ EDGES OF ALL ROOF OPENINGS LARGER THAN 24".
9. PROVIDE DOUBLE RAFTERS UNDER ALL DORMER WALL (U.O.N.).
10. ROOF DECKING TO BE 1/2" C.D.X. WITH PANEL SPAN RATING OF 24-0. RE: GENERAL NOTES FOR OTHER REQUIREMENTS.
11. RAFTERS SHALL BE NAILED TO ADJACENT CEILING JOISTS TO FORM A CONTINOUS TIE BETWEEN EXTERIOR WALLS WHEN SUCH JOISTS ARE PARALLEL TO THE RAFTERS. WHERE NOT PARALLEL, RAFTER TIES SHALL BE SPACED NOT MORE THAN 48" O.C.
12. PROVIDE 2x6 COLLAR TIES AT EVERY OTHER RAFTER (UPPER 1/3 OF ROOF).
13. RE: ARCH. DWG'S FOR ROOF SLOPES & OTHER DATA NOT CONTAINED HEREIN.
14. RE: SHEETS S7-S8 FOR FRAMING GENERAL NOTES, TYP. DETAILS & SCHEDULES.

GENERAL NOTES: COORDINATION W/ ARCH. DWGS.

1. CONTRACTOR SHALL REVIEW ARCHITECTURAL AND STRUCTURAL DRAWINGS JOINTLY PRIOR TO CONSTRUCTION, TO ENSURE COORDINATION OF ALL PHASES OF CONSTRUCTION DESCRIBED IN THESE DRAWINGS. DESCREPENCIES SHALL BE BROUGHT TO THE ATTENTION OF BOTH ARCHITECT AND ENGINEER, PRIOR TO PROCEEDING WITH CONSTRUCTION WORK.
2. THE FOLLOWING ITEMS, IN PARTICULAR, HAVE TO BE CLOSELY COORDINATED BETWEEN ARCHITECTURAL AND STRUCTURAL DRAWINGS:
   A. ALL DIMENSIONS;
   B. SLAB AND FLOOR ELEVATIONS, SLOPES, AND LOCATION AND DIMENSIONS OF ANY RECESSES, INCLUDING THOSE INTENDED FOR SHOWERS, ELEVATORS, FLOORING MATERIALS, ETC.
   C. CURBS AND VENEER LEDGES;
   D. CEILING HEIGHTS AND CEILING CONDITIONS;
   E. ROOF GEOMETRY AND SLOPES.
3. IT'S THE OWNER'S RESPONSIBILITY TO HIRE A REPUTABLE CONTRACTOR WHO CAN COORDINATE BETWEEN ARCHITECTURAL & STRUCTURAL DRAWINGS FOR ACCURACY

ROOF SLOPE = SEE ARCH.
COORDINATE ROOF SLOPE & GEOMETRY W/ ARCH. DRAWINGS,
WHICH TAKE PRECEDENCE OVER ANY SUCH INFORMATION SHOWN HEREIN.

VERIFY ALL SLOPES & ELEVATION WITH ARCHITECTURAL DRAWINGS PRIOR TO CONSTRUCTION

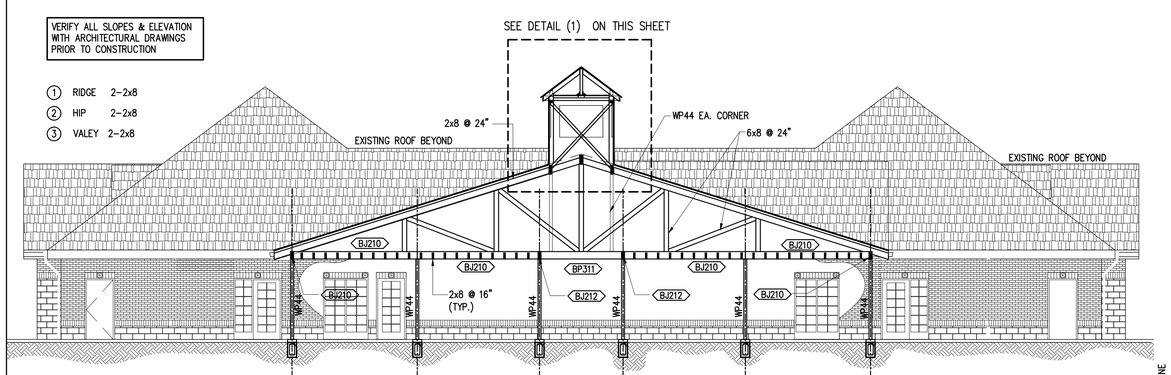

1 **SECTION:** AREA BETWEEN PHASE1 & 2

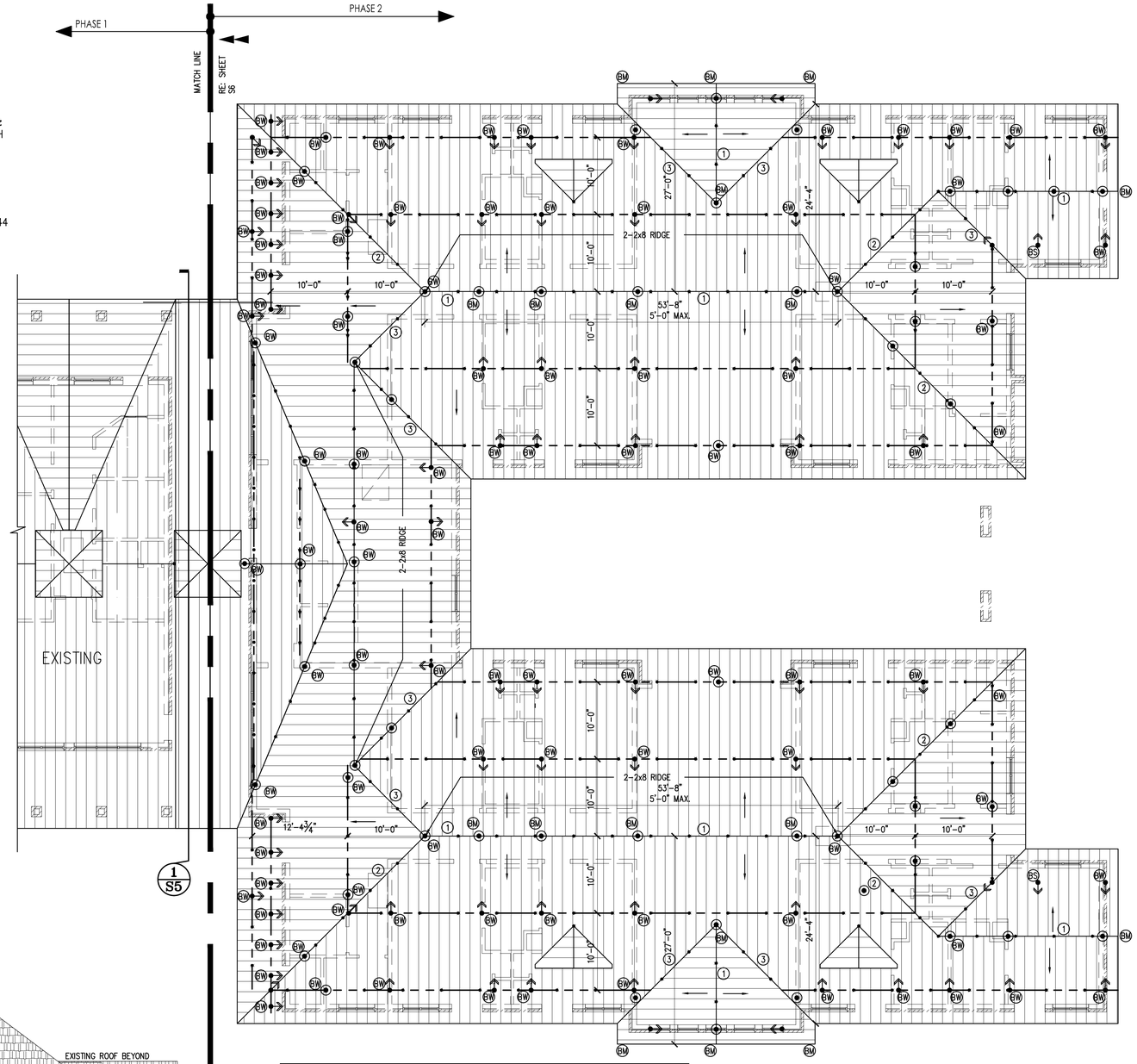

GENERAL NOTES: COORDINATION W/ ARCH. DWGS.

1. CONTRACTOR SHALL REVIEW ARCHITECTURAL AND STRUCTURAL DRAWINGS JOINTLY PRIOR TO CONSTRUCTION, TO ENSURE COORDINATION OF ALL PHASES OF CONSTRUCTION DESCRIBED IN THESE DRAWINGS. DESCREPENCIES SHALL BE BROUGHT TO THE ATTENTION OF BOTH ARCHITECT AND ENGINEER, PRIOR TO PROCEEDING WITH CONSTRUCTION WORK.
2. THE FOLLOWING ITEMS, IN PARTICULAR, HAVE TO BE CLOSELY COORDINATED BETWEEN ARCHITECTURAL AND STRUCTURAL DRAWINGS:
   A. ALL DIMENSIONS;
   B. SLAB AND FLOOR ELEVATIONS, SLOPES, AND LOCATION AND DIMENSIONS OF ANY RECESSES, INCLUDING THOSE INTENDED FOR SHOWERS, ELEVATORS, FLOORING MATERIALS, ETC.
   C. CURBS AND VENEER LEDGES;
   D. CEILING HEIGHTS AND CEILING CONDITIONS;
   E. ROOF GEOMETRY AND SLOPES.
3. IT'S THE OWNER'S RESPONSIBILITY TO HIRE A REPUTABLE CONTRACTOR WHO CAN COORDINATE BETWEEN ARCHITECTURAL & STRUCTURAL DRAWINGS FOR ACCURACY

ROOF FRAMING PLAN

SCALE: 1/8" = 1'-0"

CONTRACTOR TO VERIFY ALL DIMENSIONS, ELEVATIONS, AND COORDINATE DETAILS WITH ARCHITECTURAL DRAWINGS. ALL DIMENSIONS & ELEVATION ON ARCHITECTURAL DRAWINGS SHALL GOVERN. IT IS CONTRACTOR'S RESPONSIBILITY TO REPORT TO ENGINEER ABOUT DISCREPANCY IN DRAWINGS PRIOR TO FABRICATION & BIDDING.

ROOF FRAMING PLAN

OPTIMUM PERSONAL CARE PH.2

1110 LAKEVIEW DRIVE
SUGAR LAND, TX.77478

ISSUE HISTORY	
DATE	ISSUED FOR
	CLIENT REVIEW
	PERMIT
	CONSTRUCTION

05/23/18

STATE OF TEXAS
M.W. MIRZA
84151
PROFESSIONAL ENGINEER

PE
BUILDINGS
BRIDGES
INSPECTIONS
MARINE STRUCTURES
CIVIL ENGINEERING &
STRUCTURAL ENGINEERING

PARAMOUNT ENGINEERING LLC

10145 LONG POINT DR.
HOUSTON, TX 77043

TEL. : (713) 636-9977
FAX : (713) 888-9872
CEL. : (713) 204-1742

TBPE REGISTRATION # F-3394

DRAWN BY: Z.A. | CHECKED BY: M.M.

PROJ. NO.: PE12-225

SHEET: S5